INVERTERS

MINI-INVERTERS
SINGLE PHASE
THREE PHASE

AimLite

YOUR TRUSTED PARTNER

ABOUT US

The Management of AimLite Lighting Products is committed to constantly provide products that meet or exceed the requirements and expectations of our customers while at the same time making the company successful.

Our ISO/IEC 17025 certified laboratory is qualified by CSA International under the CPC (Certification by Category) program which allows us to conduct safety and performance evaluations and to perform over 100 different tests on our products. This allows AimLite to certify new custom products quickly and launch to the market.

AimLite's target is to maintain and improve its quality through programs that enable employees to do their job right the first time and use the best suppliers that share these same values. Our team consists of some of the most knowledgeable and recognizable people in the Canadian emergency and lighting industry.

NEW PRODUCT DEVELOPMENT

Our engineering and marketing team is composed of specialists ranging from a variety of technical backgrounds which allows us to develop a multitude of new products to meet today's market needs and requirements. Our focus is to design innovative products at a competitive price to set ourselves ahead of our competition while maintaining industry standards such as long life and energy efficiency.

CUSTOMER SATISFACTION

Customer satisfaction is the company's main priority: we want to be our customers' preferred supplier.

Our customer service department is comprised of highly trained, knowledgeable and bilingual sales representatives whose only goal is to meet the needs of the customers. Sales staffs are continuously trained to keep them abreast of the latest lighting trends, technologies and developments so they may actively serve customers, resolve issues, initiate changes, and teach co-workers.

Our technicians have extensive academic and practical experience with degrees in engineering and administration, allowing us to offer technical support in the retail, distribution and manufacturing sectors.

AimLite's management is dedicated to its customers, employees and safety.

THE IMPORTANCE OF EMERGENCY SYSTEMS

Public buildings bear a substantial electrical load, particularly due to daily lighting requirements. While the power supply fulfills daily electrical needs, unforeseen events like power outages, fires, or fluctuations can result in a loss of power. In such critical situations, reliable electrical backup systems are indispensable.

Enter the Emergency Inverter Systems also known as inverters, these systems constantly monitor the building's utility supply and swiftly respond to instances of power loss. They provide electricity to lighting and power loads necessary for safe building evacuation (egress).

WHY CHOOSE EMERGENCY INVERTER SYSTEMS?

Whether it's a storm-induced power outage, an electrical line issue, or a genuine emergency, inverters silently stand guard, ready to illuminate the path to safety for the public. Inverters represent the future of emergency lighting solutions.

HOW DO EMERGENCY SYSTEMS OPERATE?

Standard electrical systems rely on AC power, and emergency lighting loads also function on AC power, typically categorized as "normally-ON" or "normally-OFF" lighting. At times, a combination of both may require backup power.

Inverter systems consist of DC batteries and electronics capable of converting the DC power from the batteries into the necessary AC power source for emergency lighting loads. Emergency inverter systems ensure an adequate supply of AC power for the required duration, facilitating safe building evacuation if needed.

ADVANTAGES OF USING AN INVERTER OVER EMERGENCY LIGHTING

In situations where vast buildings necessitate more than just remote heads for lighting, employing an inverter proves economically sensible compared to installing extensive lengths of wire and pipe. Additionally, with an inverter, there is a single point of service, unlike multiple emergency lighting units and remotes. This is particularly advantageous in congested warehouse environments, where traditional emergency heads may not be optimally positioned for direction or might be concealed altogether.

INVERTER PERFORMANCE WITHOUT EMERGENCY REMOTES

Typically, inverters are sized to handle 25% of the lighting load. This enables regular lighting to also function as emergency lighting during power failures, illuminating the designated path of egress. The inverter load requirement may also encompass exit signs or pictogram signage.

ADDITIONAL BENEFITS TO CONSIDER

Designers have long deemed emergency lighting unattractive and obtrusive. Inverters, on the other hand, can be discreetly housed in electrical rooms, out of sight. Furthermore, with the utilization of existing lighting technologies such as fluorescent, LED, HID, and induction, there is no need for separate remotes. The aesthetic integrity remains intact.

Why compromise on safety or aesthetics? Choose the reliability and efficiency of emergency inverter systems to safeguard public spaces during critical moments

EBST-MVP

The EBST-MVP pure sine wave inverter represents a unique approach to power failure lighting applications. Pure sine wave inverters are ideal, as opposed to square and modified wave inverters, which will break down electronic ballasts and drivers prematurely. AimLite's EBST-MVP pure sine wave inverter was designed to run up to 1440W of normally ON or OFF LED, CFL or fluorescent, incandescent lighting fixtures.

NVM

The Illuminator NVM inverter features the industry's smallest cabinetry, even when all optional equipment is incorporated. It can be either wall or floor mounted. Our fast transfer technology is 98% efficient and can support all lamp sources including HID and LED.

NVP

The Illuminator NVP is a fast transfer central inverter system for HID and motor loads. The system features a single-cabinet design for units up to 16.7 kW, reducing the footprint and installation cost. With advanced communication features, the NVP offers the total solution.

NVR

The Supernova NVR is a single phase inverter, designed with the industry-leading compact footprint and are available with robust communication options. These highly efficient systems range from 1.75 kW to 16.7 kW.

NVJ

The Illuminator NVJ three phase emergency lighting inverter provides up to 50 kW of backup power for larger facilities and campuses.

NVQ

The Hypernova NVQ inverter is our sleekest and smartest three-phase units. The equipement has been designed with industry leading compact footprint and feature many communication options, such as the new IoT Inverter Connect cloud connectivity solution. The modular battery cabinet configurations optimize mechanical space requirements. These highly efficient systems range from 5 kW to 50 kW and are perfect for all commercial applications.

INTRODUCING THE EBST-MVP PURE SINE WAVE INVERTER: REDEFINING POWER FAILURE LIGHTING

A reliable and efficient solution for power failure lighting applications, the EBST-MVP Pure Sine Wave Inverter sets itself apart with its unique approach. Unlike square and modified wave inverters that can cause premature breakdown of electronic ballasts and drivers, our pure sine wave inverter ensures optimal performance and longevity.

Designed specifically for lighting fixtures, the EBST-MVP Pure Sine Wave Inverter from AimLite delivers exceptional results. It can power up to 1440W of both normally ON or OFF LED, CFL, fluorescent, and incandescent lighting fixtures, providing versatile and dependable lighting solutions.

KEY FEATURES:

1. Pure Sine Wave Output: The EBST-MVP generates a clean and stable pure sine wave output, ensuring compatibility with a wide range of lighting technologies. This prevents any potential damage or reduced lifespan that square or modified wave inverters may cause.

2. Versatile Lighting Support: Whether your lighting fixtures operate in normally ON or OFF mode, our inverter can seamlessly power LED, CFL, fluorescent, and incandescent lights. Enjoy consistent illumination during power failures without compromising on performance or functionality.

3. High Power Capacity: With an impressive capacity of up to 1440W, the EBST-MVP can support a substantial number of lighting fixtures, providing ample coverage for various commercial, residential, or industrial applications.

4. Reliability and Longevity: Our pure sine wave inverter is designed for durability, ensuring long-lasting performance even under demanding conditions. Benefit from a robust solution that safeguards your lighting investment.

5. Seamless Integration: The EBST-MVP inverter integrates smoothly with your existing lighting infrastructure, making it a convenient and hassle-free choice for power failure lighting applications.

Experience the Difference: Choose the EBST-MVP Pure Sine Wave Inverter from AimLite and revolutionize your power failure lighting systems. With its superior performance, versatility, and reliability, our inverter is the ideal choice for maintaining uninterrupted lighting when it matters most. Trust in AimLite's commitment to excellence and elevate your lighting solutions to new heights

AimLite

EBST-MVP

PURE-SINE WAVE IPS MINI-INVERTER

Normally OFF: By combining a battery unit and off-line inverter with superior 120 V or 347 V lighting performance for all types of lighting fixtures, the EBST-MVP provides exceptional power failure lighting. The typically configured battery unit is paired with an off-line, internally mounted, pure-sine wave inverter. When AC power is present there is no output and the connected fixtures are off, when the AC power fails, the unit outputs 120 V AC or 347 V AC to the connected lighting fixtures at 100% brightness.

Normally ON: This feature is easily activated by connecting a normally-ON lighting circuit to the unit. When AC power is present there is output and the connected lighting fixtures are on. When the AC power fails, the output is then transferring instantaneously to the power failure mode of the inverter and the connected lighting fixtures stay on.

FEATURES & SPECIFICATIONS

CIRCUITRY

- 120 V AC input / 120 V AC output or 347 V AC input / 347 V AC output
- Transfer time of 400ms
- Momentary push button test switch
- Diagnostic/pilot LEDs for AC ON and CHARGE
- Fully automatic, current limited charger
- Line latched, low voltage protection
- Brownout and short circuit protection
- Terminal block connectors for output load
- Dimming override control is standard
- Auto transfer switch for normally-on lighting circuit
- Maintenance free, sealed lead acid battery(s)

Overload protectors:

- 1000 W: Fuse allowing max load of 175A and board protector with protection up to 1100 W
- 1440 W: Fuse allowing max load of 175A and board protector with protection up to 1500 W
- Optional automatic-testing, self-diagnostic charger: Continuously monitors the unit's status
- Automatically performs battery load testing and auto-cycling at preset intervals
- Indicates malfunctions or auto-test failures
- May accept load to 80% capacity when load feature power factor of 0.9 or more

MECHANICAL

- 18 Gauge steel construction (cabinet A and B), 16 Gauge steel construction (cabinet C)
- Universal spider knockout pattern and keyhole mounting slots stamped into back of cabinet
- Multiple conduit entry knockouts
- Air intake and exhaust fan placed on the sides for 1 000 W and more
- White powder coat finish standard
- Separate battery compartment

APPROVALS

- CSA certified to C22.2 #141-15

OVERVIEW		
ELECTRICAL	NORMALLY ON AND OFF	120 V AC OR 347 V AC
MECHANICAL	SEPARATE BATTERY COMPARTMENT	STEEL CONSTRUCTION
CA CANADIAN MADE		

EBST-MVP

TYPICAL SPECIFICATION

TYPICAL SPECIFICATION

1. Supply and install The Aimlite EBST-MVP mini-inverter designed to provide power output based on the input voltage, either 120 V AC or 347 V AC. The EBST-MVP features a transfer time of 400ms, a momentary push-button test switch, diagnostic LEDs for AC ON and CHARGE indication, a fully automatic current-limited charger, line-latched low voltage protection, and brownout and short circuit protection. The device includes terminal block connectors for output load, standard dimming override control, an auto transfer switch for normally-on lighting circuits, and maintenance-free sealed lead-acid battery(s). The EBST-MVP also incorporates overload protectors and is constructed using steel cabinets with knockout patterns, keyhole mounting slots, multiple conduit entry knockouts, and air intake/exhaust fans for models with 1,000 W and above. The device is finished with a white powder coat and includes a separate battery compartment the EBST-MVP shall be CSA certified to C22.2 #141-15.

2. Electrical Specifications:

- Input Voltage: 120 V AC or 347 V AC
- Output Voltage: 120 V AC or 347 V AC
- Transfer Time: 400ms
- Push-Button Test Switch: Momentary type
- Diagnostic LEDs: AC ON and CHARGE indication
- Charger Type: Fully automatic, current-limited
- Protection Features: Line-latched low voltage protection, brownout protection, short circuit protection
- Output Load Connectors: Terminal block connectors
- Dimming Override Control: Standard feature
- Auto Transfer Switch: Included for normally-on lighting circuits
- Battery Type: Maintenance-free, sealed lead-acid
- **Overload Protection:**
  - 1,000 W Model: Fuse allowing a maximum load of 175 A and board protector with protection up to 1,100 W
  - 1,440 W Model: Fuse allowing a maximum load of 175 A and board protector with protection up to 1,500 W

3. Mechanical Specifications:

- **Cabinet Construction:**
  - Cabinet A and B: 18 Gauge steel construction
  - Cabinet C: 16 Gauge steel construction
- Mounting Options: Universal spider knock-out pattern and keyhole mounting slots stamped into the back of the cabinet
- Conduit Entry Knockouts: Multiple knock-outs provided
- Air Intake/Exhaust: Side-mounted fans for models with 1,000 W and above
- Finish: Standard white powder coat finish
- Battery Compartment: Separate compartment for battery storage

4. Approvals:

- CSA Certification: Certified to C22.2 #141-15 standards

The Aimlite EBST-MVP shall be model number _____.

EBST-MVP
NORMALLY ON
120V

320W

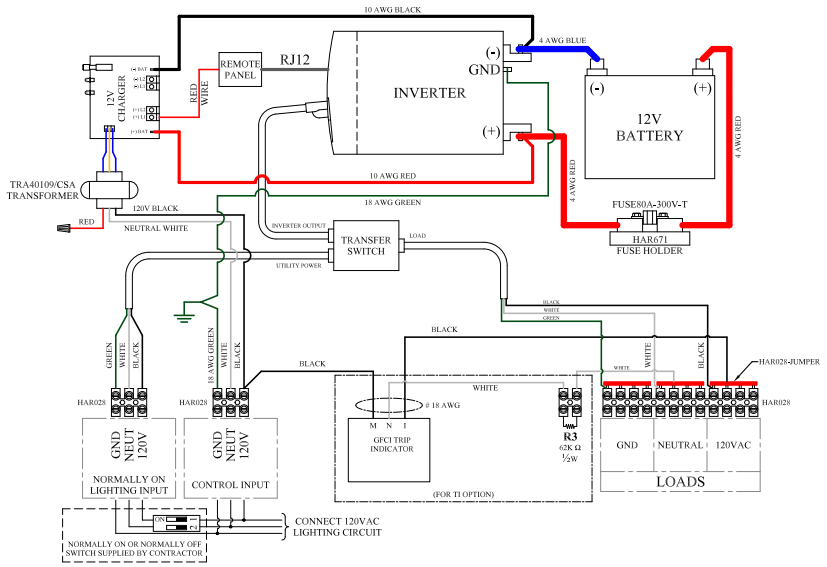

500W

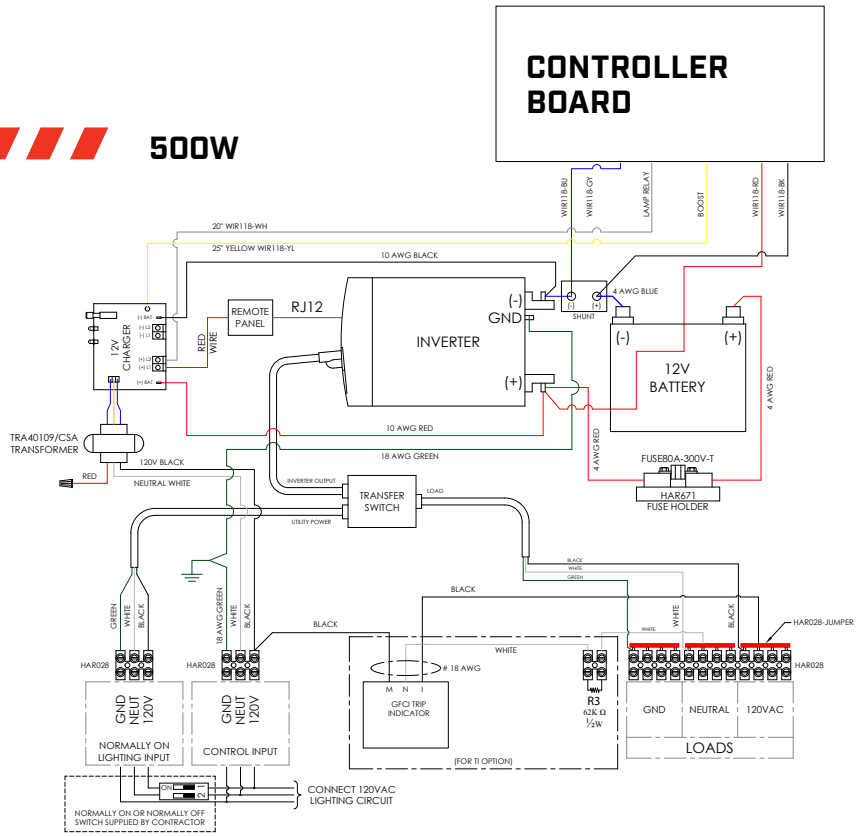

1000W

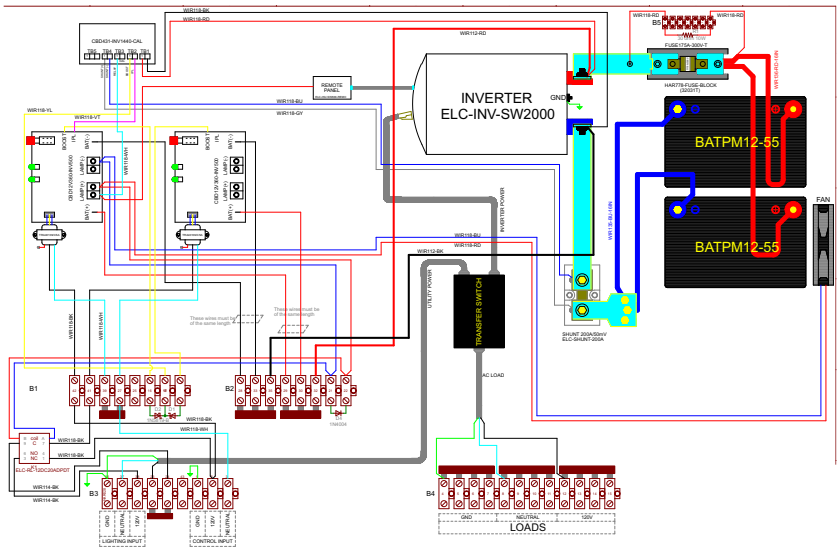

MOST POPULAR SETUP

1440W

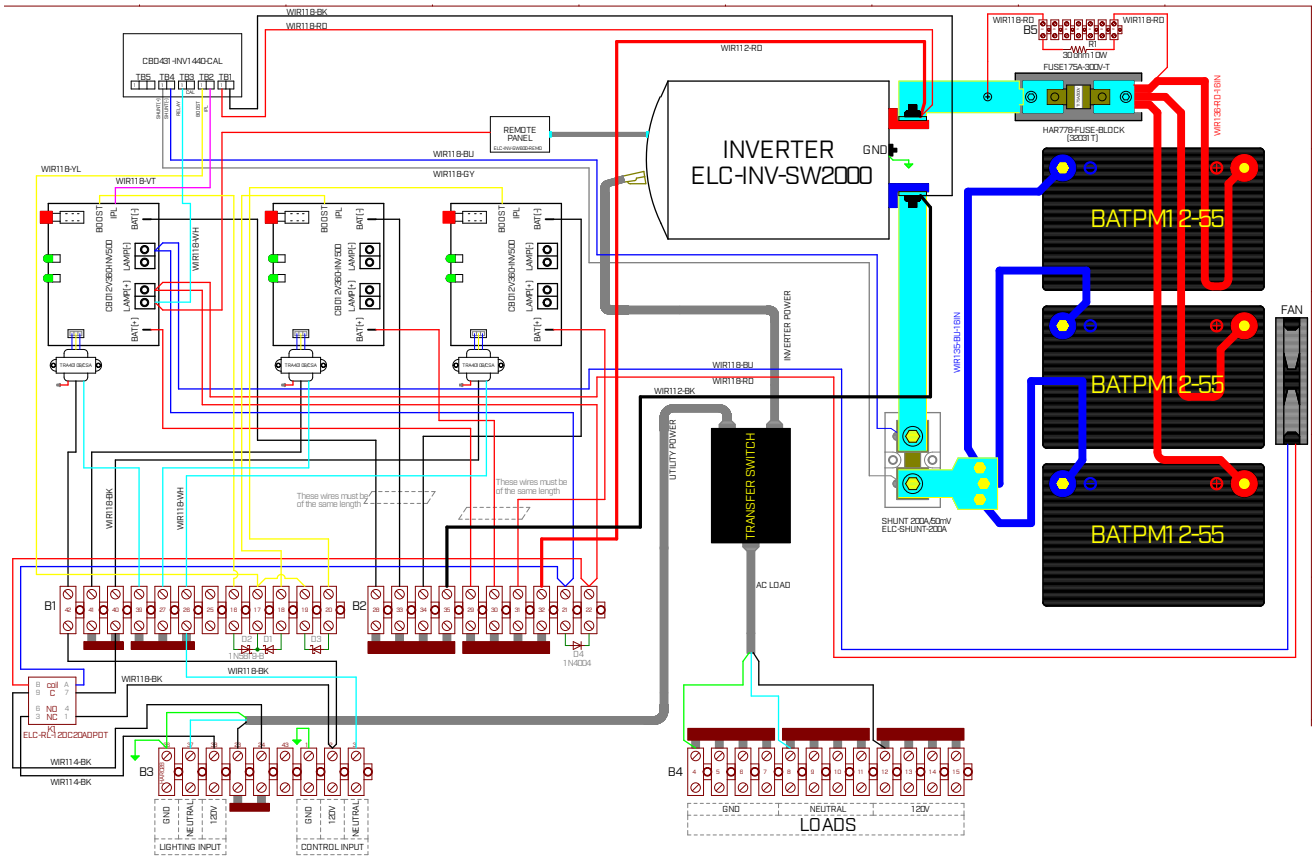

INTRODUCING OUR FAST TRANSFER TECHNOLOGY

INTRODUCING OUR FAST TRANSFER TECHNOLOGY

Experience a highly efficient and seamless power transfer within our cutting-edge inverter systems. Our innovative systems utilize PWM (Pulse Width Modulation) technology and IGBTs (Isolated Gate Bi-Polar transistors) to swiftly transfer power from the utility to batteries in just 2mS. When a voltage drop is detected (approximately 10% below the required level), these advanced devices seamlessly switch the power source to the batteries.

DISCOVER THE MULTITUDE OF ADVANTAGES OUR SYSTEMS OFFER:

1. Uninterrupted Performance: With our fast transfer technology, enjoy a no-break system that ensures your connected load acts as emergency light fixtures, and continues to operate at full capacity without any decrease in lumen output.

2. Versatile Compatibility: Any fixture designed to operate from the utility grid can seamlessly function from our inverter in emergency mode, granting you the freedom to design your system without limitations.

3. Enhanced Efficiency: Our full-size systems boast exceptional efficiency rates of 98% or higher. This remarkable efficiency not only results in lower operating costs during normal mode but also reduces heat loss, leading to decreased expenses for conditioning the space.

4. Cost Savings: Thanks to our system's efficiency, you can expect reduced energy waste and lower utility bills, ensuring cost-effective operation over the long term.

5. Integrated Lighting Control: Our fast transfer technology harmonizes seamlessly with all lighting control systems. While some systems may not detect this rapid transfer, our "0" (output transfer delay) option is specifically designed to accommodate such systems. This means that in utility mode, you can harness the advantages of our fast transfer system while utilizing your preferred lighting controls.

Discover the power of our Fast Transfer Technology and unlock a new level of efficiency, reliability, and flexibility for your power management needs

System Display Functions

ADVANCED TECHNOLOGY

Designed with Pure Sine Wave technology, our inverters provide direct AC power and full illumination to all lighting sources. With industry-leading efficiencies, they run cool and reduce the overall operating costs of emergency lighting systems.

DESIGNED WITH THE FIELD IN MIND

The small cabinet, with wall or floor mount capabilities, allows clients to install the system virtually anywhere in the building with minimal space requirements. All lighting inverters perform and log the monthly and yearly tests as required by the national building codes, and the intelligent front meter panel allows easy access to this information. In addition, this front meter panel displays system status and allows for real time diagnostics of the system's electronics.

Meter Functions

- AC Voltage Input
- AC Voltage Output
- AC Current Output
- Battery Voltage
- System Days
- Battery Current
- VA Output
- Inverter Watts
- Ambient Temperature
- Inverter Minutes

Program Functions

- Date
- Time
- Month Test Date / Time
- Yearly Test Date / Time
- Load Fault Reduction Setting
- Low Battery Alarm
- Near Low Battery Alarm
- Low AC Voltage Alarm
- High AC Voltage Alarm
- Ambient Temperature Alarm

Control Functions

- Test Log & Event Log
- 75 Logs Stored
- Date, Time, Duration
- Output Voltage
- Output Current
- Ambient Temperature
- Alarms Preset
- Alarm Log
- 75 Logs Stored
- Date, Time, Alarm Type
- Test
- Buzzer On / Off

INVERTER.CONNECT

Inverter Connect is a cloud-based platform that allows users to monitor and receive alerts about their emergency lighting inverter systems. IoT Inverter Connect streamlines system communications and sends users notifications on their computers, tablets or smartphone devices.
The web-based platform allows any device that connects to the internet to log in to the system.

Enhances Building Safety

- Proactively monitors & notifies of critical issues that could affect building safety.
- Proactive maintenance solidifies confidence that the lights will illuminate during an emergency.

Saves Times

- User-friendly design makes it easy to find the most crucial information quickly.
- Easy-to-use dashboard enables a status check of a fleet of inverters from anywhere.

Connectivity

- Receive status and alarm notifications by SMS and/or email.
- See the results of your inverters' periodic self-tests. View detailed real-time inverter telemetry.
- Accessible from any device connected to the internet.

Future-Ready Design

- Software is adaptable to meet the demands of future technological advances.

ILLLUMINATOR NVM
INTERMEDIATE INVERTER

The Illuminator NVM inverter features the industry's smallest cabinetry, even when all optional equipment is incorporated. It can be either wall or floor mounted. Our fast transfer technology is 98% efficient and can support all lamp sources including HID and LED.

FEATURES & SPECIFICATIONS

STANDARD FEATURES

- 98% Efficient (Typical)
- 65KAIC Input Rating
- NFPA 101 Self Testing and Data Logging
- User Programmable with Password Protection
- Automatic Event, Test and Alarm Log
- Compatible with all lighting loads including HID/LED
- Input Circuit Breaker
- One Output Circuit Breaker
- No Break 2ms Transfer Time
- Wall Hung Units (No Mounting Brackets)
- RS-232 Communication Port

OPTIONAL FEATURES

- Enhanced Communications
  - Expanded Building Management Protocols
  - BACnet or Modbus Communications Interface
  - NEW IoT Connect Cloud Software
- Internal or External Maintenance Bypass
- Summary Form C Contacts
- Status Monitoring Contacts
- Output Circuit Breakers
- Normally Off Output with Variable Time Delay
- Output Trip Alarms
- Remote Summary Alarm Panel
- Wall Brackets, Floor, or Seismic Mounting

SPECIFICATIONS

- Input Voltage: 120, 277, 347VAC 1 Phase 2 Wire Plus Ground
- Output Voltage: 120, 277, 347VAC 1 Phase 2 Wire Plus Ground
- Output Load Power Factor .5 Lag to.5 Lead
- Output Distortion Less than 3% THD for Linear Loads
- Forced Air Cooling Only During Emergency Operation; No Filters Required
- Electronic and Magnetic Ballast Compatible
- Generator Compatibility
- Custom Voltages Available
- 30, 60, 90 and 120 Minute Run Time Standard

APPROVALS

- cUL to CSA 22.2 #141-15

ORDERING GUIDE

☐ — ☐ ☐ S ☐ ☐ ☐ ☐ / ☐

SERIES	VOLTAGE INPUT-OUTPUT	CAPACITY RATING (W)	BATTERY TYPE	OUTPUT BREAKERS[1]			
				OUTPUT	VOLTAGE/POLES	AMP RATING	QUANTITY[2]
NVM30	A-A - 120 INPUT; 120 OUTPUT	1 000	S - STANDARD	O - NORMALLY ON	A - 120V 1-POLE	10	T01
NVM60	A-AE - 120 INPUT; 120/277 OUTPUT	1 600		F - NORMALLY OFF	B - 208V 2-POLES	16	T02
NVM90	B-A - 208 INPUT; 120 OUTPUT	2 200			C - 240	20	T03
NVM120	C-AC - 240 INPUT; 120/240 OUTPUT	2 800			E - 277	25	T04
	E-A - 277 INPUT; 120 OUTPUT				H - 347	32	T05
	E-E - 277 INPUT; 277 OUTPUT					40	T06
	E-EA - 277 INPUT; 277/120 OUTPUT					50	
	B-AC - 208 INPUT; 120/240 OUTPUT					63	
	B-AB - 208 INPUT; 120/208 OUTPUT						
	H-H - 347 INPUT; 347 OUTPUT						

OPTIONS	
STANDARD FEATURES	
C -	STATUS MONITORING CONTACTS DRY FORM C
DT -	DRIP TOP (NEMA 2)
OPTIONAL FEATURES	
BBM -	INTERNAL MAINTENANCE BYPASS (BREAK-BEFORE-MAKE)
BL -	CIRCUIT BREAKER LOCK(S)
BS -	BATTERY STRAPPING
BTM -	BATTERY TEMPERATURE MONITOR
L -	LOAD CONTROL RELAY (LINE VOLTAGE DIMMER OR SWITCH BYPASS)
MBB -	INTERNAL MAINTENANCE BYPASS (MAKE-BEFORE-BREAK)
O -	OUTPUT TRANSFER DELAY
P -	REMOTE STATUS PANEL (REQUIRES OPTION C)
RA -	REMOTE SUMMARY ALARM PANEL
S -	SUMMARY FAULT FORM C CONTACTS
PICK 1	
BIP -	BACNET IP
IOT -	IOT INVERTER CLOUD CONNECT
MIP -	MODBUS TCP/IP
MOUNTING OPTION PICK 1	
BLANK -	STANDARD WALL
FL -	FLOOR MOUNT BRACKET (ADDS 4" TO TOTAL SYSTEM HEIGHT)
SM -	SEISMIC / RAISED FLOOR (ADDS 4" TO TOTAL SYSTEM HEIGHT)
W -	WALL MOUNT BRACKETS

[1] Output breakers are optional

[2] Maximum out breakers available:
1000-2800W: 6 supervised
347V : 14 supervised

[3] Anchorage based on calculations. For systems requiring OSHPD/Withstand testing, please contact the factory

OPTION TABLE

OPTION CODE	OPTION NAME	DESCRIPTION
BBM	INTERNAL MAINTENANCE BYPASS BREAK BEFORE MAKE	TOGGLE SWITCH DESIGNED TO DISCONNECT INVERTER FROM ELECTRICAL SYSTEM FOR MAINTENANCE (BREAK BEFORE MAKE)
BIP	BACNET IP	"MSTP" ALLOW UPLOAD OF FMP DATA VIA RS232 INTERMEDIATE DEVICE. THIS INFO CAN THEN BE DOWNLOADED TO CUSTOMER DEVICE. ALLOWS DIRECT COMMUNICATION VIA IP
BL	OUTPUT CIRCUIT BREAKER LOCK(S)	ALLOWS CUSTOMER TO LOCK THE OUTPUT CIRCUIT BREAKER IN ON OR OFF POSITION
BS	BATTERY STRAPPING	STRAPPING OF THE BATTEIES TO STOP MOVEMENT
BTM	BATTERY TEMPERATURE MONITOR	1. WARNING ALARM: WARNS WHEN BATTERY TEMPERATURE IS GETTING TOO HIGH. 2. ABSOLUTE ALARM: WHEN TEMPERATURE REACHES HIGH TEMP THIS SHUTS DOWN THE STRING OF BATTERIES WHERE THE HOT BATTERY IS.
C	STATUS MONITORING CONTACTS	5 FORM C DRY CONTACTS: 1. SYSTEM IN BYPASS 2. SUMMARY ALARM: ANY ALARM IN THE FMP 3. OUTPUT TRIP ALARM 4. UTILITY FAILURE 5. INVERTER ON
DT	DRIP TOP (NEMA 2)	METAL PIECE DESIGNED TO DIRECT FALLING WATER AWAY FROM THE UNIT
EMBP	EXTERNAL MAINTENANCE BYPASS (MAKE-BEFORE-BREAK)	MAINTENANCE BYPASS SWITCH MOUNTED EXTERNAL TO THE SYSTEM (CANNOT USE WITH OUTPUT CIRCUIT BREAKERS)
FL	FLOOR MOUNT BRACKET (ADD 4" TO HEIGHT OF SYSTEM)	ALLOWS CLIENT TO GET THE EM OFF THE FLOOR
IOT	IOT INVERTER CONNECT CLOUD COMMUNICATION	SYSTEM USING THE CLOUD TO ALLOW MONITORING OF MULTIPLE SYSTEMS IN ONE LOCATION
L	LOAD CONTROL RELAY DIMMER OR BYPASS SWITCH	LOAD CONTROL RELAY (LINE VOLTAGE DIMMER OR SWITCH BYPASS) – EQUAL TO AN LVS EPC-2-D
MBB	INTERNAL MAINTENANCE BYPASS MAKE BEFORE BREAK	TOGGLE SWITCH DESIGNED TO DISCONNECT INVERTER FROM ELECTRICAL SYSTEM FOR MAINTENANCE (MAKE BEFORE BREAK)
MIP	MODBUS TCP/IP	"MSTP" ALLOW UPLOAD OF FMP DATA VIA RS232 INTERMEDIATE DEVICE. THIS INFO CAN THEN BE DOWNLOADED TO CUSTOMER DEVICE. ALLOWS DIRECT COMMUNICATION VIA IP
O	OUTPUT TRANSFER DELAY	DEVICE DESIGNED TO DELAY TRANSFER ADJUSTABLE 0-7.5 SECONDS, FACTORY SET AT 3 SECONDS. USED WHEN CONTROL SYSTEM CANNOT DETECT THE FAST TRANSFER
P	REMOTE STATUS PANEL (STATUS ALARMS, REQUIRES C OPTION)	SINGLE GANG BOX SHOWING STATUS OF ALARMS, REQUIRES C OPTION
R	REMOTE METER PANEL	FULL SIZE METER PANEL MOUNTED REMOTELY IN A NEMA 1 ENCLOSURE
RA	REMOTE SUMMARY ALARM PANEL	LED INDICATOR AND SOUND ALERT
S	SUMMARY FAULT FORM C CONTACTS	RELAY CONTACT SHOWING ANY ALARM
SM	SEISMIC MOUNTING	INSTRUCTIONS AND HARDWARE FOR MOUNTING SYSTEM IN STANDARD SEISMIC APPLICATIONS
T	OUTPUT TRIP ALARM	ALARMS WHEN ANY OUTPUT CIRCUIT BREAKER IS TRIPPED
W	WALL MOUNT BRACKET	BRACKET FOR MOUNTING SYSTEM ON THE WALL

DIMENSIONS

POWER RATING (KW) 30 MIN.	VOLTAGE IN-OUT (VAC)	CABINET DIMENSIONS				BATTERIES		TOTAL SYSTEM WEIGHT
		WIDTH (IN)	HEIGHT (IN)	DEPTH (IN)	WEIGHT (LBS)	NO. OF BATTERIES	WEIGHT (LBS)	
1	120 OR 277	24.25	27.5	10.5	121	4	93	214
	347		43.25		199			292
1.6	120 OR 277	24.25	43.25	10.5	165	6	139	304
	347		55		237			376
2.2	120 OR 277	24.25	43.25	10.5	171	8	186	357
	347		55		237			423
2.8	120 OR 277	24.25	55	10.5	203	10	232	435
	347		70.75		281			513

POWER RATING (KW)			VOLTAGE IN-OUT (VAC)	CABINET DIMENSIONS				BATTERIES		TOTAL SYSTEM WEIGHT
60 MIN.	90 MIN.	120 MIN.		WIDTH (IN)	HEIGHT (IN)	DEPTH (IN)	WEIGHT (LBS)	NO. OF BATTERIES	WEIGHT (LBS)	
1	0.9	0.8	120 OR 277	24.25	27.5	10.5	121	4	146	267
			347		43.25		199			345
1.6	1.44	1.28	120 OR 277	24.25	43.25	10.5	165	6	218	383
			347		55		237			455
2.2	1.98	1.76	120 OR 277	24.25	43.25	10.5	171	8	291	462
			347		55		237			528
2.8	2.52	2.24	120 OR 277	24.25	55	10.5	203	10	364	567
			347		70.75		281			645

HEAT LOSS TABLE

30 MINUTE RUN TIME		60 MINUTE RUN TIME		90 MINUTE RUN TIME		120 MINUTE RUN TIME	
OUPUT RATING (KW)	HEAT LOSS (BTU/H)	OUPUT RATING (KW)	HEAT LOSS (BTU/H)	OUPUT RATING (KW)	HEAT LOSS (BTU/H)	OUPUT RATING (KW)	HEAT LOSS (BTU/H)
1.00	68	1.00	68	0.90	61	0.80	55
1.60	109	1.60	109	1.44	98	1.28	87
2.20	150	2.20	150	1.98	135	1.76	120
2.80	191	2.80	191	2.52	172	2.24	153

ILLLUMINATOR NVP
SINGLE PHASE INVERTER

The Illuminator NVP is a fast transfer central inverter system for HID and motor loads. The system features a single-cabinet design for units up to 16.7 kW, reducing the footprint and installation cost. With advanced communication features, the NVP offers the total solution.

FEATURES & SPECIFICATIONS

STANDARD FEATURES

- 98% Efficient (Typical)
- PWM/IGBT Technology
- Microprocessor Control
- User Programmable with Password Protection
- Automatic Event, Test & Alarm Log
- RS232 Communications Port
- Input Circuit Breaker
- 2ms Transfer Time
- Low Audible Noise
- Space-Saving, Single Cabinet Design
- 65kAIC Withstand Rating

OPTIONAL FEATURES

- Enhanced Communications
  - Expanded Building Management Protocols
  - BACnet or Modbus Communications Interface
  - IoT Connect Cloud Software
- Internal Maintenance Bypass
- Summary Alarm Dry Form C Contacts
- Status Monitoring Dry Form C Contacts
- Remote Meter Panel
- Output Circuit Breakers
  - 1500-5000W: 8 supervised
  - 6000-16700W: 18 supervised
- Factory Startup and Training
- Normally Off Output
- Output Trip Alarms
- Remote Summary and Remote Status Alarm Panels

SPECIFICATIONS

- Input 120, 277, 347VAC 1 Phase 2 Wire Plus Ground
- Output 120, 277, 347VAC 1 Phase 2 Wire Plus Ground
- Output Load Power Factor .5 Lag to.5 Lead
- Compatible with all LED Drivers
- Forced Air Cooling Only During Emergency Operation, No Filters Required
- Output Distortion Less than 3% THD for Linear Loads
- Generator Compatibility
- Custom & Mixed Voltages Available
- 30, 60, 90 and 120 minutes runtime available

APPROVALS

- cUL to CSA 22.2 #141-15

	—			S						/	

SERIES	VOLTAGE INPUT-OUTPUT	CAPACITY RATING (W)	BATTERY TYPE	OUTPUT BREAKERS[1]				OPTIONS
				OUTPUT	VOLTAGE/POLES	AMP RATING	QUANTITY[2]	
NVP30 NVP60 NVP90 NVP120	A-A - 120 INPUT; 120 OUTPUT A-AE - 120 INPUT; 120/277 OUTPUT B-A - 208 INPUT; 120 OUTPUT C-AC - 240 INPUT; 120/240 OUTPUT E-A - 277 INPUT; 120 OUTPUT E-E - 277 INPUT; 277 OUTPUT E-EA - 277 INPUT; 277/120 OUTPUT B-AC - 208 INPUT; 120/240 OUTPUT H-H - 347 INPUT; 347 OUTPUT B-AB - 208 INPUT; 120/208 OUTPUT	1 500 2 250 3 000 3 750 5 000 6 000 8 000 10 000 12 500 16 700	S - STANDARD	O - NORMALLY ON F - NORMALLY OFF	A - 120 B - 208 C - 240 E - 277 H - 347	10 16 20 25 32 40 50 63	T01 T02 T03 T04 T05 T06 T07 T08 T09 T10 T11 T12 T13 T14 T15 T16 T17 T18	**STANDARD FEATURES** C - STATUS MONITORING CONTACTS DRY FORM C DT - DRIP TOP (NEMA 2) **OPTIONAL FEATURES** BBM - INTERNAL MAINTENANCE BYPASS (BREAK-BEFORE-MAKE) BL - CIRCUIT BREAKER LOCK(S) BTM - BATTERY TEMPERATURE MONITOR F - FAST CHARGE I - INVERTER ON DRY FORM C CONTACTS L - LOAD CONTROL INTERFACE (DIMMER / SWITCH BYPASS) MBB - INTERNAL MAINTENANCE BYPASS (MAKE-BEFORE-BREAK) O - OUTPUT TRANSFER DELAY P - REMOTE STATUS PANEL (REQUIRES OPTION C) R - REMOTE METER PANEL RA - REMOTE SUMMARY ALARM PANEL S - SUMMARY DRY FORM C CONTACTS SM - SEISMIC BRACING/MOUNTING[3] PICK 1 BIP - BACNET IP IOT - IOT INVERTER CLOUD CONNECT MIP - MODBUS TCP/IP

[1] Output breakers are optional
[2] Maximum output breakers available:
1500-5000W: 8 supervised poles
6000-16700W: 18 supervised poles
Combinations of 1 and 2 pole breakers available (consult factory)
347V : 14 supervised
[3] Anchorage based on calculations. For systems requiring OSHPD/Withstand testing, please contact the factory.

OPTION TABLE

OPTION CODE	OPTION NAME	DESCRIPTION
BBM	INTERNAL MAINTENANCE BYPASS (BREAK-BEFORE-MAKE)	TOGGLE SWITCH DESIGNED TO DISCONNECT INVERTER FROM ELECTRICAL SYSTEM FOR MAINTENANCE (BREAK BEFORE MAKE)
BIP	BACNET IP	"MSTP" ALLOW UPLOAD OF FMP DATA VIA RS232 INTERMEDIATE DEVICE. THIS INFO CAN THEN BE DOWNLOADED TO CUSTOMER DEVICE. ALLOWS DIRECT COMMUNICATION VIA IP
BL	OUTPUT CIRCUIT BREAKER LOCK(S)	ALLOWS CUSTOMER TO LOCK THE OUTPUT CIRCUIT BREAKER IN ON OR OFF POSITION
BTM	BATTERY TEMPERATURE MONITOR	1. WARNING ALARM: WARNS WHEN BATTERY TEMPERATURE IS GETTING TOO HIGH. 2. ABSOLUTE ALARM: WHEN TEMPERATURE REACHES HIGH TEMP THIS SHUTS DOWN THE STRING OF BATTERIES WHERE THE HOT BATTERY IS.
C	STATUS MONITORING CONTACTS	5 FORM C DRY CONTACTS: 1. SYSTEM IN BYPASS 2. SUMMARY ALARM: ANY ALARM IN THE FMP 3. OUTPUT TRIP ALARM 4. UTILITY FAILURE 5. INVERTER ON
DT	DRIP TOP (NEMA 2)	METAL PIECE DESIGNED TO DIRECT FALLING WATER AWAY FROM THE UNIT
EMBP	EXTERNAL MAINTENANCE BYPASS (MAKE-BEFORE-BREAK)	MAINTENANCE BYPASS SWITCH MOUNTED EXTERNAL TO THE SYSTEM (CANNOT USE WITH OUTPUT CIRCUIT BREAKERS)
F	FAST CHARGE	ALLOWS THE SYSTEM TO RECHARGE IN 12 HOURS FROM LVD
I	INVERTER ON DRY FORM C CONTACT	FORM C DRY CONTACT WHICH OPENS WHEN INVERTER IS ON
IOT	IOT INVERTER CONNECT CLOUD COMMUNICATION	SYSTEM USING THE CLOUD TO ALLOW MONITORING OF MULTIPLE SYSTEMS IN ONE LOCATION
L	LOAD CONTROL RELAY (LINE VOLTAGE DIMMER OR SWITCH BYPASS)	EQUAL TO AN LVS EPC-2-D
MBB	INTERNAL MAINTENANCE BYPASS MAKE BEFORE BREAK	TOGGLE SWITCH DESIGNED TO DISCONNECT INVERTER FROM ELECTRICAL SYSTEM FOR MAINTENANCE (MAKE BEFORE BREAK)
MIP	MODBUS TCP/IP	"MSTP" ALLOW UPLOAD OF FMP DATA VIA RS232 INTERMEDIATE DEVICE. THIS INFO CAN THEN BE DOWNLOADED TO CUSTOMER DEVICE. ALLOWS DIRECT COMMUNICATION VIA IP
O	OUTPUT TRANSFER DELAY	DEVICE DESIGNED TO DELAY TRANSFER ADJUSTABLE 0-7.5 SECONDS, FACTORY SET AT 3 SECONDS. USED WHEN CONTROL SYSTEM CANNOT DETECT THE FAST TRANSFER
P	REMOTE STATUS PANEL (STATUS ALARMS, REQUIRES C OPTION)	SINGLE GANG BOX SHOWING STATUS OF ALARMS, REQUIRES C OPTION
R	REMOTE METER PANEL	FULL SIZE METER PANEL MOUNTED REMOTELY IN A NEMA 1 ENCLOSURE
RA	REMOTE SUMMARY ALARM PANEL	LED INDICATOR AND SOUND ALERT
S	SUMMARY FAULT FORM C CONTACTS	RELAY CONTACT SHOWING ANY ALARM
SM	SEISMIC MOUNTING	INSTRUCTIONS AND HARDWARE FOR MOUNTING SYSTEM IN STANDARD SEISMIC APPLICATIONS
T	OUTPUT TRIP ALARM	ALARMS WHEN ANY OUTPUT CIRCUIT BREAKER IS TRIPPED

DIMENSIONS

POWER RATING (KW) 30 MIN.	VOLTAGE IN-OUT (VAC)	CABINET DIMENSIONS				BATTERIES		TOTAL SYSTEM WEIGHT
		WIDTH (IN)	HEIGHT (IN)	DEPTH (IN)	WEIGHT (LBS)	NO. OF BATTERIES	WEIGHT (LBS)	
1.5	120 OR 277	30	47	25	215	4	146	361
	347		69		339			485
2.25	120 OR 277	30	47	25	230	6	218	448
	347		69		354			572
3	120 OR 277	30	47	25	235	8	291	526
	347		69		365			656
3.75	120 OR 277	30	47	25	240	10	364	604
	347		69		376			740
5	120 OR 277	30	47	25	280	12	437	717
	347		69		425			862
6	120 OR 277	48	76	25	605	15	546	1 151
	347	78			784			1 330
8	120 OR 277	48	76	25	640	20	728	1 368
	347	78			832			1 560
10	120 OR 277	48	76	25	785	12	860	1 645
	347	78			990			1 850
12.5	120 OR 277	48	76	25	805	15	1076	1 881
	347	78			1025			2 101
16.7	120 OR 277	48	76	25	885	20	1434	2 319
	347	78			1120			2 554

POWER RATING (KW)			VOLTAGE IN-OUT (VAC)	CABINET DIMENSIONS				BATTERIES		TOTAL SYSTEM WEIGHT
60 MIN.	90 MIN.	120 MIN.		WIDTH (IN)	HEIGHT (IN)	DEPTH (IN)	WEIGHT (LBS)	NO. OF BATTERIES	WEIGHT (LBS)	
1.5	1.39	1.28	120 OR 277	30	47	25	215	4	287	502
			347		69		339			626
2.25	2.08	1.91	120 OR 277	30	47	25	230	6	430	660
			347		69		354			784
3	2.78	2.55	120 OR 277	30	47	25	235	8	574	809
			347		69		365			939
3.75	3.47	3.19	120 OR 277	30	47	25	240	10	717	957
			347		69		376			1093
5	4.63	4.25	120 OR 277	30	47	25	280	12	860	1140
			347		69		425			1285
6	5.55	5.1	120 OR 277	48	76	25	605	15	1076	1681
			347	78			784			1860
8	7.4	6.8	120 OR 277	48	76	25	640	20	1434	2074
			347	78			832			2266
10	9.25	8.5	120 OR 277	48	76	25	785	24	1721	2506
			347	78			990			2711
12.5	11.6	10.6	120 OR 277	48	76	25	805	30	2151	2956
			347	78			1025			3176
16.7	15.4	14.2	120 OR 277	48	76	25	885	40	2868	3753
			347	78			1120			3988

HEAT LOSS TABLE

30 MINUTE RUN TIME		60 MINUTE RUN TIME		90 MINUTE RUN TIME		120 MINUTE RUN TIME	
OUPUT RATING (KW)	HEAT LOSS (BTU/H)	OUPUT RATING (KW)	HEAT LOSS (BTU/H)	OUPUT RATING (KW)	HEAT LOSS (BTU/H)	OUPUT RATING (KW)	HEAT LOSS (BTU/H)
1.50	102	1.50	102	1.39	95	1.28	87
2.25	153	2.25	153	2.08	142	1.91	130
3.00	205	3.00	205	2.78	189	2.55	174
3.75	256	3.75	256	3.47	237	3.19	217
5.00	341	5.0	341	4.63	315	4.25	290
6.00	409	6.0	409	5.55	379	5.10	348
8.00	546	8.0	546	7.40	505	6.80	464
10.0	682	10.0	682	9.25	631	8.50	580
12.5	853	12.5	853	11.6	789	10.6	725
16.7	1 139	16.7	1 139	15.4	1 054	14.2	968

NVR
SUPERNOVA
SINGLE PHASE INVERTER

The Supernova NVR is a single phase inverter, designed with the industry-leading compact footprint and are available with robust communication options. These highly efficient systems range from 1.75 kW to 16.7 kW.

FEATURES & SPECIFICATIONS

STANDARD FEATURES

- 98% Efficient (Typical)
- PWM/IGBT Technology and Micro-Controller
- User Programmable with Password Protection
- Automatic Event, Test and Alarm Log
- RS232 Communications Port
- Input Circuit Breaker
- 2ms Transfer Time
- Low Audible Noise
- NEMA Type 1 Single Cabinet Space-Saving Design
- 65kAIC Interrupting Rating

OPTIONAL FEATURES

- Enhanced Communications
  - Expanded Building Management Protocols
  - IoT Connect Cloud Software
- Internal or External Maintenance Bypass
- Summary Dry Form C Contacts
- Remote Meter Panel
- Output Circuit Breakers
  - 1 750-5 000W: up to 11 supervised
  - 6 250-7 500W: up to 16 supervised
  - 10 000-16 700W: up to 22 supervised
- Normally Off Output
- Output Trip Alarms
- Remote Summary Alarm Panel

SPECIFICATIONS

- Input 120, 277 or 347VAC 1 Phase 2 Wire Plus Ground
- Output 120, 277 or 347VAC 1 Phase 2 Wire Plus Ground
- Output Load Power Factor .5 Lag to .5 Lead
- Compatible with LED Drivers
- Forced Air Cooling Only During Emergency Operation; No Filters Required
- Output Voltage Distortion Less than 3% THD for Linear Loads
- Compatible with Generators
- 30, 60, 90, 120 Minute Runtime available
- Inverter Operating Temperature 0°C to 40°C
- Battery Operating Temperature 20°C to 30°C

APPROVALS

- cUL to CSA 22.2 #141-15

ORDERING GUIDE

	—			S				/	

SERIES	VOLTAGE	CAPACITY RATING (W)	BATTERY TYPE	OUTPUT BREAKERS[1]				OPTIONS
				OUTPUT	VOLTAGE/POLES	AMP RATING	QUANTITY[2]	
NVR30 NVR60 NVR90 NVR120	A-A - 120 INPUT; 120 OUTPUT A-AE - 120 INPUT; 120/277 OUTPUT B-A - 208 INPUT; 120 OUTPUT C-AC - 240 INPUT; 120/240 OUTPUT E-A - 277 INPUT; 120 OUTPUT E-EA - 277 INPUT; 277/120 OUTPUT B-AC - 208 INPUT; 120/240 OUTPUT B-AB - 208 INPUT; 120/208 OUTPUT H-H - 347 INPUT; 347 OUTPUT	1 750 2 500 3 750 5 000 6 250 7 500 10 000 12 500 16 700	S - STANDARD	O - NORMALLY ON F - NORMALLY OFF	A - 120V 1-POLE B - 208V 2-POLES C - 240V 2-POLES E - 277V 1-POLE H - 347V K - 480V 2-POLES	10 16 20 25 32 40 50 63	T01-T22	**STANDARD FEATURES** C - STATUS MONITORING CONTACTS DRY FORM C DT - DRIP TOP (NEMA 2) **OPTIONAL FEATURES** BBM - INTERNAL MAINTENANCE BYPASS (BREAK BEFORE MAKE) BL - OUTPUT CIRCUIT BREAKER LOCK(S) BTM - BATTERY TEMPERATURE MONITOR[3] F - FAST CHARGE I - INVERTER ON DRY FORM C CONTACT L - LOAD CONTROL RELAY (LINE VOLTAGE DIMMER OR SWITCH BYPASS) MBB - INTERNAL MAINTENANCE BYPASS (MAKE BEFORE BREAK) O - OUTPUT TRANSFER DELAY P - REMOTE STATUS PANEL (STATUS WITH ALARMS & SILENCE SWITCH; REQUIRES C OPTION) R - REMOTE METER PANEL RA - REMOTE SUMMARY ALARM PANEL S - SUMMARY FAULT FORM C DRY CONTACTS SM - SEISMIC MOUNTING[4] PICK 1 BIP - BACNET IP IOT - IOT INVERTER CLOUD CONNECT MIP - MODBUS TCP/IP

[1] Output breakers are optional

[2] Maximum out breakers available:
1 750-5 000W: 11 supervised
6 250-7 500W: 16 supervised
10 000-16 700W: 22 supervised
347V : 14 supervised

[3] BTM option only available on the following sizes: 1 750, 2 500, 3 750, 5 000, 6 250, 7 500W

[4] Anchorage based on calculations. For systems requiring OSHPD/Withstand testing, please contact the factory

OPTION TABLE

OPTION CODE	OPTION NAME	DESCRIPTION
BBM	INTERNAL MAINTENANCE BYPASS (BREAK-BEFORE-MAKE)	TOGGLE SWITCH DESIGNED TO DISCONNECT INVERTER FROM ELECTRICAL SYSTEM FOR MAINTENANCE (BREAK BEFORE MAKE)
BIP	BACNET IP	"MSTP" ALLOW UPLOAD OF FMP DATA VIA RS232 INTERMEDIATE DEVICE. THIS INFO CAN THEN BE DOWNLOADED TO CUSTOMER DEVICE. ALLOWS DIRECT COMMUNICATION VIA IP
BL	OUTPUT CIRCUIT BREAKER LOCK(S)	ALLOWS CUSTOMER TO LOCK THE OUTPUT CIRCUIT BREAKER IN ON OR OFF POSITION
BTM	BATTERY TEMPERATURE MONITOR	1. WARNING ALARM: WARNS WHEN BATTERY TEMPERATURE IS GETTING TOO HIGH. 2. ABSOLUTE ALARM: WHEN TEMPERATURE REACHES HIGH TEMP THIS SHUTS DOWN THE STRING OF BATTERIES WHERE THE HOT BATTERY IS.
C	STATUS MONITORING CONTACTS	5 FORM C DRY CONTACTS: 1. SYSTEM IN BYPASS 2. SUMMARY ALARM: ANY ALARM IN THE FMP 3. OUTPUT TRIP ALARM 4. UTILITY FAILURE 5. INVERTER ON
DT	DRIP TOP (NEMA 2)	METAL PIECE DESIGNED TO DIRECT FALLING WATER AWAY FROM THE UNIT
EMBP	EXTERNAL MAINTENANCE BYPASS (MAKE-BEFORE-BREAK)	MAINTENANCE BYPASS SWITCH MOUNTED EXTERNAL TO THE SYSTEM (CANNOT USE WITH OUTPUT CIRCUIT BREAKERS)
F	FAST CHARGE	ALLOWS THE SYSTEM TO RECHARGE IN 12 HOURS FROM LVD
I	INVERTER ON DRY FORM C CONTACT	FORM C DRY CONTACT WHICH OPENS WHEN INVERTER IS ON
IOT	IOT INVERTER CONNECT CLOUD COMMUNICATION	SYSTEM USING THE CLOUD TO ALLOW MONITORING OF MULTIPLE SYSTEMS IN ONE LOCATION
L	LOAD CONTROL RELAY (LINE VOLTAGE DIMMER OR SWITCH BYPASS)	EQUAL TO AN LVS EPC-2-D
MBB	INTERNAL MAINTENANCE BYPASS MAKE BEFORE BREAK	TOGGLE SWITCH DESIGNED TO DISCONNECT INVERTER FROM ELECTRICAL SYSTEM FOR MAINTENANCE (MAKE BEFORE BREAK)
MIP	MODBUS TCP/IP	"MSTP" ALLOW UPLOAD OF FMP DATA VIA RS232 INTERMEDIATE DEVICE. THIS INFO CAN THEN BE DOWNLOADED TO CUSTOMER DEVICE. ALLOWS DIRECT COMMUNICATION VIA IP
O	OUTPUT TRANSFER DELAY	DEVICE DESIGNED TO DELAY TRANSFER ADJUSTABLE 0-7.5 SECONDS, FACTORY SET AT 3 SECONDS. USED WHEN CONTROL SYSTEM CANNOT DETECT THE FAST TRANSFER
P	REMOTE STATUS PANEL (STATUS ALARMS, REQUIRES C OPTION)	SINGLE GANG BOX SHOWING STATUS OF ALARMS, REQUIRES C OPTION
R	REMOTE METER PANEL	FULL SIZE METER PANEL MOUNTED REMOTELY IN A NEMA 1 ENCLOSURE
RA	REMOTE SUMMARY ALARM PANEL	LED INDICATOR AND SOUND ALERT
S	SUMMARY FAULT FORM C CONTACTS	RELAY CONTACT SHOWING ANY ALARM
SM	SEISMIC MOUNTING	INSTRUCTIONS AND HARDWARE FOR MOUNTING SYSTEM IN STANDARD SEISMIC APPLICATIONS
T	OUTPUT TRIP ALARM	ALARMS WHEN ANY OUTPUT CIRCUIT BREAKER IS TRIPPED

DIMENSIONS

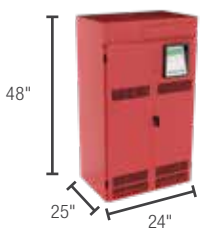

NVR

POWER RATING (KW) 30 MIN.	VOLTAGE IN-OUT (VAC)	CABINET DIMENSIONS				BATTERIES		TOTAL SYSTEM WEIGHT
		WIDTH (IN)	HEIGHT (IN)	DEPTH (IN)	WEIGHT (LBS)	NO. OF BATTERIES	WEIGHT (LBS)	
1.75	120 OR 277	24	48	25	247	4	287	534
	347	54			396			683
2.50	120 OR 277	24	48	25	263	4	287	550
	347	54			412			699
3.75	120 OR 277	24	48	25	280	6	430	710
	347	54			441			871
5.00	120 OR 277	24	48	25	297	8	574	871
	347	54			467			1 041
6.25	120 OR 277	36	53	25	418	10	717	1 135
	347	66			597			1 314
7.50	120 OR 277	36	53	25	444	12	860	1 304
	347	66			636			1 496
10.0	120 OR 277	42	78.3	25	940	12	860	1 800
	347	72			1 145			2 005
12.5	120 OR 277	42	78.3	25	980	15	1 076	2 056
	347	72			1 200			2 276
16.7	120 OR 277	42	78.3	25	1 030	20	1 434	2 464
	347	72			1 265			2 699

POWER RATING (KW)			VOLTAGE IN-OUT (VAC)	CABINET DIMENSIONS				BATTERIES		TOTAL SYSTEM WEIGHT
60 MIN.	90 MIN.	120 MIN.		WIDTH (IN)	HEIGHT (IN)	DEPTH (IN)	WEIGHT (LBS)	NO. OF BATTERIES	WEIGHT (LBS)	
1.75	1.53	1.31	120 OR 277	24	48	25	247	4	287	534
			347	54			396			683
2.50	2.19	1.88	120 OR 277	24	48	25	263	4	397	660
			347	54			412			809
3.75	3.28	2.81	120 OR 277	24	48	25	280	6	595	875
			347	54			441			1 036
5.00	4.38	3.75	120 OR 277	24	48	25	297	8	794	1 091
			347	54			467			1 261
6.25	5.47	4.69	120 OR 277	36	53	25	418	10	992	1 410
			347	66			597			1 589
7.50	6.56	5.63	120 OR 277	36	53	25	444	12	1 190	1 634
			347	66			636			1 826
10.0	8.75	7.50	120 OR 277	42	78.3	25	940	12	1 428	2 368
			347	72			1 145			2 573
12.5	10.9	9.38	120 OR 277	42	78.3	25	980	15	1 785	2 765
			347	72			1 200			2 985
16.7	14.6	12.5	120 OR 277	42	78.3	25	1 030	20	2 380	3 410
			347	72			1 265			3 645

HEAT LOSS TABLE

30 MINUTE RUN TIME		60 MINUTE RUN TIME		90 MINUTE RUN TIME		120 MINUTE RUN TIME	
OUPUT RATING (KW)	HEAT LOSS (BTU/H)	OUPUT RATING (KW)	HEAT LOSS (BTU/H)	OUPUT RATING (KW)	HEAT LOSS (BTU/H)	OUPUT RATING (KW)	HEAT LOSS (BTU/H)
1.75	119	1.75	119	1.53	104	1.31	90
2.50	171	2.50	171	2.19	149	1.88	128
3.75	256	3.75	256	3.28	224	2.81	192
5.00	341	5.00	341	4.38	298	3.75	256
6.25	426	6.25	426	5.47	373	4.69	320
7.50	512	7.50	512	6.56	448	5.63	384
10.0	682	10.0	682	8.75	597	7.50	512
12.5	853	12.5	853	10.9	746	9.38	639
16.7	1 139	16.7	1 139	14.6	997	12.5	854

ILLLUMINATOR NVJ
THREE PHASE INVERTER

The Illuminator NVJ three phase emergency lighting inverter provides up to 50kW of backup power for larger facilities and campuses.

FEATURES & SPECIFICATIONS

STANDARD FEATURES

- 98% Efficient (Typical)
- PWM/IGBT Technology & Microprocessor Control
- Internal Maintenance Bypass
- User Programmable with Password Protection
- Automatic Event & Alarm Log
- RS232 Communications Port
- Input Circuit Breaker
- Low Audible Noise

OPTIONAL FEATURES

- Enhanced Communications
  - Expanded Building Management Protocols
  - BACnet or Modbus Communications Interface
  - IoT Connect Cloud Software
- External Maintenance Bypass
- Status Monitoring Dry Form C Contacts
- Summary Dry Form C Contacts
- Output Circuit Breakers
  - 4 800 - 16 700 W: up to 8 supervised poles, additional 19 with a top enclosure
  - 24 000 - 50 000 W: up to 30 supervised poles
- Remote Meter Panel

SPECIFICATIONS

- Input 120/208, 277/480, 347/600 VAC 3-Phase 4 Wire Wye Configuration
- Output 120/208, 277/480, 347/600 VAC 3-Phase Wye Or Delta Configuration
- Output Load Power Factor .5 Lag to .5 Lead
- LED, Electronic & Magnetic Ballast Compatible
- Output Distortion Less Than 3% THD For Linear Loads
- Generator Compatibility
- Forced Air Cooling Only During Emergency Operation; No Filters Required
- 30, 60, and 120 Minute Runtime available (90 minute certification pending)
- Inverter Operating Temperature 0°C to 40 °C
- Battery Operating Temperature 20°C to 30°C

APPROVALS

- cUL to CSA 22.2 #141-15

ORDERING GUIDE

	—					S											/	

SERIES	VOLTAGE INPUT-OUTPUT	CAPACITY RATING (W)	BATTERY TYPE	OUTPUT BREAKERS[1]				OPTIONS
				OUTPUT	VOLTAGE/POLES	AMP RATING	QUAN-TITY[2]	
NVJ30 NVJ60 NVJ90 NVJ120	AB-AB - 120/208 INPUT; 120/208 OUTPUT EK-EK - 277/480 INPUT; 277/480 OUTPUT HS-HS - 347/600 INPUT; 347/600 OUTPUT	4 800 6 000 8 000 10 000 12 500 16 700 24 000 33 000 40 000 50 000	S - STAN-DARD	O - NORMALLY ON F - NORMALLY OFF	A - 120V 1-POLE B - 208V 2-POLES C - 240V 2-POLES E - 277V 1-POLE AB - 120/208V 3-POLES H - 347V K - 480V 2-POLES	10 16 20 25 32 40 50 63	T01 - T30	**STANDARD FEATURES** C - STATUS MONITORING CONTACTS DRY FORM C DT - DRIP TOP (NEMA 2) **OPTIONAL FEATURES** BBM - INTERNAL MAINTENANCE BYPASS (BREAK-BEFORE-MAKE) BL - CIRCUIT BREAKER LOCK(S) BTM - BATTERY TEMPERATURE MONITOR EMBP - EXTERNAL MAINTENANCE BYPASS (MAKE-BEFORE-BREAK) F - FAST CHARGE I - INVERTER ON DRY FORM C CONTACTS L - LOAD CONTROL INTERFACE (DIMMER / SWITCH BYPASS) MBB - INTERNAL MAINTENANCE BYPASS (MAKE-BEFORE-BREAK) O - OUTPUT TRANSFER DELAY P - REMOTE STATUS PANEL (REQUIRES OPTION C) R - REMOTE METER PANEL RA - REMOTE SUMMARY ALARM PANEL S - SUMMARY DRY FORM C CONTACTS SM - SEISMIC BRACING/MOUNTING PICK 1 BIP - BACNET IP IOT - IOT INVERTER CLOUD CONNECT MIP - MODBUS TCP/IP

[1] Output breakers are optional
[2] Maximum out breakers available:
4 800-16 700W: 8 supervised or 20 supervised with a top enclosure
24 000-50 000W: 30 supervised
347V : 14 supervised

OPTION TABLE

OPTION CODE	OPTION NAME	DESCRIPTION
BBM	INTERNAL MAINTENANCE BYPASS (BREAK-BEFORE-MAKE)	TOGGLE SWITCH DESIGNED TO DISCONNECT INVERTER FROM ELECTRICAL SYSTEM FOR MAINTENANCE (BREAK BEFORE MAKE)
BIP	BACNET IP	"MSTP" ALLOW UPLOAD OF FMP DATA VIA RS232 INTERMEDIATE DEVICE. THIS INFO CAN THEN BE DOWNLOADED TO CUSTOMER DEVICE. ALLOWS DIRECT COMMUNICATION VIA IP
BL	OUTPUT CIRCUIT BREAKER LOCK(S)	ALLOWS CUSTOMER TO LOCK THE OUTPUT CIRCUIT BREAKER IN ON OR OFF POSITION
BTM	BATTERY TEMPERATURE MONITOR	1. WARNING ALARM: WARNS WHEN BATTERY TEMPERATURE IS GETTING TOO HIGH. 2. ABSOLUTE ALARM: WHEN TEMPERATURE REACHES HIGH TEMP THIS SHUTS DOWN THE STRING OF BATTERIES WHERE THE HOT BATTERY IS.
C	STATUS MONITORING CONTACTS	5 FORM C DRY CONTACTS: 1. SYSTEM IN BYPASS 2. SUMMARY ALARM: ANY ALARM IN THE FMP 3. OUTPUT TRIP ALARM 4. UTILITY FAILURE 5. INVERTER ON
DT	DRIP TOP (NEMA 2)	METAL PIECE DESIGNED TO DIRECT FALLING WATER AWAY FROM THE UNIT
EMBP	EXTERNAL MAINTENANCE BYPASS SWITCH	MAINTENANCE BYPASS SWITCH MOUNTED EXTERNAL TO THE SYSTEM (CANNOT USE WITH OUTPUT CIRCUIT BREAKERS)
F	FAST CHARGE	ALLOWS THE SYSTEM TO RECHARGE IN 12 HOURS FROM LVD
I	INVERTER ON DRY FORM C CONTACT	FORM C DRY CONTACT WHICH OPENS WHEN INVERTER IS ON
IOT	IOT INVERTER CONNECT CLOUD COMMUNICATION	SYSTEM USING THE CLOUD TO ALLOW MONITORING OF MULTIPLE SYSTEMS IN ONE LOCATION
L	LOAD CONTROL RELAY (LINE VOLTAGE DIMMER OR SWITCH BYPASS)	EQUAL TO AN LVS EPC-2-D
MBB	INTERNAL MAINTENANCE BYPASS MAKE BEFORE BREAK	TOGGLE SWITCH DESIGNED TO DISCONNECT INVERTER FROM ELECTRICAL SYSTEM FOR MAINTENANCE (MAKE BEFORE BREAK)
MIP	MODBUS TCP/IP	"MSTP" ALLOW UPLOAD OF FMP DATA VIA RS232 INTERMEDIATE DEVICE. THIS INFO CAN THEN BE DOWNLOADED TO CUSTOMER DEVICE. ALLOWS DIRECT COMMUNICATION VIA IP
O	OUTPUT TRANSFER DELAY	DEVICE DESIGNED TO DELAY TRANSFER ADJUSTABLE 0-7.5 SECONDS, FACTORY SET AT 3 SECONDS. USED WHEN CONTROL SYSTEM CANNOT DETECT THE FAST TRANSFER
P	REMOTE STATUS PANEL (STATUS ALARMS, REQUIRES C OPTION)	SINGLE GANG BOX SHOWING STATUS OF ALARMS, REQUIRES C OPTION
R	REMOTE METER PANEL	FULL SIZE METER PANEL MOUNTED REMOTELY IN A NEMA 1 ENCLOSURE
RA	REMOTE SUMMARY ALARM PANEL	LED INDICATOR AND SOUND ALERT
S	SUMMARY FAULT FORM C CONTACTS	RELAY CONTACT SHOWING ANY ALARM
SM	SEISMIC MOUNTING	INSTRUCTIONS AND HARDWARE FOR MOUNTING SYSTEM IN STANDARD SEISMIC APPLICATIONS
T	OUTPUT TRIP ALARM	ALARMS WHEN ANY OUTPUT CIRCUIT BREAKER IS TRIPPED

DIMENSIONS

POWER RATING (KW) 30 MIN.	VOLTAGE IN-OUT (VAC)	ELECTRONICS CABINET DIMENSIONS				BATTERIES			BATTERY CABINET DIMENSIONS			TOTAL SYSTEM WEIGHT
		WIDTH (IN)	HEIGHT (IN)	DEPTH (IN)	WEIGHT (LBS)	NO. OF BATTERIES	WEIGHT (LBS)	WIDTH (IN)	HEIGHT (IN)	DEPTH (IN)	WEIGHT (LBS)	
4.8	120/208 OR 277/480	30	47	25	535	12	437	17.5	62	25	285	1 257
	347/600		69		725							1 447
6	120/208 OR 277/480	30	47	25	535	15	546	17.5	62	25	285	1 366
	347/600		69		725							1 556
8	120/208 OR 277/480	30	47	25	535	20	728	17.5	62	25	285	1 548
	347/600		69		725							1 738
10	120/208 OR 277/480	30	47	25	639	12	860	22.75	77	25	375	1 874
	347/600		69		851							2 086
12.5	120/208 OR 277/480	30	47	25	639	15	1076	22.75	77	25	375	2 090
	347/600		69		873							2 324
16.7	120/208 OR 277/480	30	47	25	639	20	1434	22.75	77	25	375	2 448
	347/600		69		873							2 682
24	120/208 OR 277/480	44	72	31	1250	40	2868	48	72	31	650	4 768
	347/600	74			1547							5 065
33	120/208 OR 277/480	44	72	31	1250	40	2868	48	72	31	650	4 768
	347/600	74			1585							5 103
40	120/208 OR 277/480	44	72	31	1460	60	4302	48	72	31	700	6 462
	347/600	74			1827							6 829
50	120/208 OR 277/480	44	72	31	1460	60	4302	48	72	31	700	6 462
	347/600	74			1827							6 829

POWER RATING (KW)			VOLTAGE IN-OUT (VAC)	ELECTRONICS CABINET DIMENSIONS				BATTERIES			BATTERY CABINET DIMENSIONS			TOTAL SYSTEM WEIGHT
60 MIN.	90 MIN.	120 MIN.		WIDTH (IN)	HEIGHT (IN)	DEPTH (IN)	WEIGHT (LBS)	NO. OF BATTERIES	WEIGHT (LBS)	WIDTH (IN)	HEIGHT (IN)	DEPTH (IN)	WEIGHT (LBS)	
4.8	4.44	4.08	120/208 OR 277/480	30	47	25	535	12	860	30	47	25	210	1 605
			347/600		69		725							1 795
6	5.55	5.1	120/208 OR 277/480	30	47	25	535	15	1076	30	47	25	210	1 821
			347/600		69		725							2 011
8	7.4	6.8	120/208 OR 277/480	30	47	25	535	20	1434	30	47	25	232	2 201
			347/600		69		725							2 391
10	9.25	8.5	120/208 OR 277/480	30	47	25	639	24	1721	30	47	25	232	2 592
			347/600		69		851							2 804
12.5	11.6	10.6	120/208 OR 277/480	30	47	25	639	30	2151	60	47	25	420	3 210
			347/600		69		873							3 444
16.7	15.4	14.2	120/208 OR 277/480	30	47	25	639	40	2868	60	47	25	464	3 971
			347/600		69		873							4 205
24	22.2	20.4	120/208 OR 277/480	44	72	31	1250	60	4302	48	72	31	700	6 252
			347/600	74			1547							6 549
33	30.5	28.1	120/208 OR 277/480	44	72	31	1250	80	5736	96	72	31	1300	8 286
			347/600	74			1585							8 621
40	37	34	120/208 OR 277/480	44	72	31	1460	100	7170	96	72	31	1300	9 930
			347/600	74			1827							10 297
50	46.3	42.5	120/208 OR 277/480	44	72	31	1460	120	8604	96	72	31	1400	11 464
			347/600	74			1827							11 831

HEAT LOSS TABLE

30 MINUTE RUN TIME		60 MINUTE RUN TIME		90 MINUTE RUN TIME		120 MINUTE RUN TIME	
OUPUT RATING (KW)	HEAT LOSS (BTU/H)	OUPUT RATING (KW)	HEAT LOSS (BTU/H)	OUPUT RATING (KW)	HEAT LOSS (BTU/H)	OUPUT RATING (KW)	HEAT LOSS (BTU/H)
4.8	327	4.8	327	4.44	303	4.08	278
6.0	409	6.0	409	5.55	379	5.10	348
8.0	546	8.0	546	7.40	505	6.80	464
10.0	682	10.0	682	9.25	631	8.50	580
12.5	853	12.5	853	11.6	789	10.6	725
16.7	1 139	16.7	1 139	15.4	1 054	14.2	968
24.0	1 637	24.0	1 637	22.2	1 514	20.4	1 391
33.0	2 251	33.0	2 251	30.5	2 082	28.1	1 913
40.0	2 728	40.0	2 728	37.0	2 523	34.0	2 319
50.0	3 410	50.0	3 410	46.3	3 154	42.5	2 899

NVQ
HYPERNOVA THREE PHASE INVERTER

The Hypernova NVQ inverter is our sleekest and smartest three-phase units. The equipement has been designed with industry leading compact footprint and feature many communication options, such as the new IoT Inverter Connect cloud connectivity solution. The modular battery cabinet configurations optimize mechanical space requirements. These highly efficient systems range from 5 kW to 50 kW and are perfect for all commercial applications.

FEATURES & SPECIFICATIONS

STANDARD FEATURES

- 98% Efficient Typical
- PWM/IGBT Technology and Micro-Controller
- Internal Maintenance Bypass
- User Programmable with Password Protection
- Automatic Event, Test and Alarm Log
- RS232 Communications Port
- Input Circuit Breaker
- 2ms Transfer Time
- Low Audible Noise
- Space-Saving Design
- 65kAIC Withstanding Rating

OPTIONAL FEATURES

- Enhanced Communications
  - Expanded Building Management Protocols
  - BACnet or Modbus Communications Interface
  - IoT Connect Cloud Software
- External Maintenance Bypass
- Summary Alarm Dry Form C Contacts
- Internal Output Distribution Circuit Breakers
- Normally Off Output
- Output Trip Alarms
- Remote Panels (Meter, Status or Summary Alarm)

SPECIFICATIONS

- Input Voltage: 120/208, 277/480, 347/600 VAC 3-Phase 4 Wire Wye Configuration
- Output Voltage: 120/208, 277/480, 347/600 VAC 3-Phase Wye or Delta Configuration
- Output Load Power Factor .5 Lag to .5 Lead
- Compatible with all lighting including LED Drivers
- Forced Air Cooling Only During Emergency Operation; No Filters Required
- Output Distortion Less than 3% THD for Linear Loads
- Compatible with Generators
- 30, 60, 90 and 120 Minute Runtime available
- Inverter Operating Temperature 0°C to 40°C
- Battery Operating Temperature 20°C to 30°C

APPROVALS

- cUL to CSA 22.2 #141-15

ORDERING GUIDE

	—									/	

SERIES	VOLTAGE INPUT-OUTPUT	CAPACITY RATING (W)	BATTERY TYPE	OUTPUT BREAKERS[1]				OPTIONS
				OUTPUT	VOLTAGE/POLES	AMP RATING	QUANTITY[2]	
NVQ30 NVQ60 NVQ90 NVQ120	AB-AB - 120/208 INPUT; 120/208 OUTPUT EK-EK - 277/480 INPUT; 277/480 OUTPUT HS-HS - 347/600 INPUT; 347/600 OUTPUT	5 000 7 500 10 000 12 500 16 700 25 000 33 200 37 500 50 000	S - STANDARD	O - NORMALLY ON F - NORMALLY OFF	A - 120V 1-POLE B - 208V 2-POLES C - 240V 2-POLES E - 277V 1-POLE AB - 120/208V 3-POLES AK - 277/480V 3-POLES H - 347V K - 480V 2-POLES	10 16 20 25 32 40 50 63	T01 - T30	**STANDARD FEATURES** C - STATUS MONITORING CONTACTS DRY FORM C DT - DRIP TOP (NEMA 2) **OPTIONAL FEATURES** BCF - BATTERY CABINET FAN BTM - BATTERY TEMPERATURE MONITOR F - FAST CHARGEOUTPUT TRANSFER I - INVERTER ON DRY FORM C CONTACT L - LOAD CONTROL RELAY (DIMMER OR SWITCH BYPASS)[3] O - OUTPUT TRANSFER DELAY P - REMOTE STATUS PANEL (STATUS ALARMS, REQUIRES C OPTION) R - REMOTE METER PANEL RA - REMOTE SUMMARY ALARM PANEL S - SUMMARY FAULT FORM C CONTACTS SM - SEISMIC MOUNTING[4] PICK 1 BIP - BACNET IP IOT - IOT INVERTER CLOUD CONNECT MIP - MODBUS TCP/IP

[1] Output breakers are optional
[2] Maximum out breakers available: 5 000-10 000W: 19 supervised poles
12 500-16 700W: 27 supervised poles
25 000-50 000W: 30 supervised poles
Combinations of 1, 2 and/or 3 pole breakers available (consult factory)
347V : 14 supervised
[3] Contact factory
[4] Anchorage based on calculations. For systems requiring OSHPD/Withstand testing, please contact the factory.

OPTION TABLE

OPTION CODE	OPTION NAME	DESCRIPTION
BBM	INTERNAL MAINTENANCE BYPASS (BREAK-BEFORE-MAKE)	TOGGLE SWITCH DESIGNED TO DISCONNECT INVERTER FROM ELECTRICAL SYSTEM FOR MAINTENANCE (BREAK BEFORE MAKE)
BCF	BATTERY CABINET FAN	FAN IN BATTERY CABINETS (ALWAYS RUNNING)
BIP	BACNET IP	"MSTP" ALLOW UPLOAD OF FMP DATA VIA RS232 INTERMEDIATE DEVICE. THIS INFO CAN THEN BE DOWNLOADED TO CUSTOMER DEVICE. ALLOWS DIRECT COMMUNICATION VIA IP
BL	OUTPUT CIRCUIT BREAKER LOCK(S)	ALLOWS CUSTOMER TO LOCK THE OUTPUT CIRCUIT BREAKER IN ON OR OFF POSITION
BTM	BATTERY TEMPERATURE MONITOR	1. WARNING ALARM: WARNS WHEN BATTERY TEMPERATURE IS GETTING TOO HIGH. 2. ABSOLUTE ALARM: WHEN TEMPERATURE REACHES HIGH TEMP THIS SHUTS DOWN THE STRING OF BATTERIES WHERE THE HOT BATTERY IS.
C	STATUS MONITORING CONTACTS	5 FORM C DRY CONTACTS: 1. SYSTEM IN BYPASS 2. SUMMARY ALARM: ANY ALARM IN THE FMP 3. OUTPUT TRIP ALARM 4. UTILITY FAILURE 5. INVERTER ON
DT	DRIP TOP (NEMA 2)	METAL PIECE DESIGNED TO DIRECT FALLING WATER AWAY FROM THE UNIT
EMBP	EXTERNAL MAINTENANCE BYPASS (MAKE-BEFORE-BREAK)	MAINTENANCE BYPASS SWITCH MOUNTED EXTERNAL TO THE SYSTEM (CANNOT USE WITH OUTPUT CIRCUIT BREAKERS)
F	FAST CHARGE	ALLOWS THE SYSTEM TO RECHARGE IN 12 HOURS FROM LVD
I	INVERTER ON DRY FORM C CONTACT	FORM C DRY CONTACT WHICH OPENS WHEN INVERTER IS ON
IOT	IOT INVERTER CONNECT CLOUD COMMUNICATION	SYSTEM USING THE CLOUD TO ALLOW MONITORING OF MULTIPLE SYSTEMS IN ONE LOCATION
L	LOAD CONTROL RELAY (LINE VOLTAGE DIMMER OR SWITCH BYPASS)	EQUAL TO AN LVS EPC-2-D
MIP	MODBUS TCP/IP	"MSTP" ALLOW UPLOAD OF FMP DATA VIA RS232 INTERMEDIATE DEVICE. THIS INFO CAN THEN BE DOWNLOADED TO CUSTOMER DEVICE. ALLOWS DIRECT COMMUNICATION VIA IP
O	OUTPUT TRANSFER DELAY	DEVICE DESIGNED TO DELAY TRANSFER ADJUSTABLE 0-7.5 SECONDS, FACTORY SET AT 3 SECONDS. USED WHEN CONTROL SYSTEM CANNOT DETECT THE FAST TRANSFER
P	REMOTE STATUS PANEL (STATUS ALARMS, REQUIRES C OPTION)	SINGLE GANG BOX SHOWING STATUS OF ALARMS, REQUIRES C OPTION
R	REMOTE METER PANEL	FULL SIZE METER PANEL MOUNTED REMOTELY IN A NEMA 1 ENCLOSURE
RA	REMOTE SUMMARY ALARM PANEL	LED INDICATOR AND SOUND ALERT
S	SUMMARY FAULT FORM C CONTACTS	RELAY CONTACT SHOWING ANY ALARM
SM	SEISMIC MOUNTING	INSTRUCTIONS AND HARDWARE FOR MOUNTING SYSTEM IN STANDARD SEISMIC APPLICATIONS
T	OUTPUT TRIP ALARM	ALARMS WHEN ANY OUTPUT CIRCUIT BREAKER IS TRIPPED

DIMENSIONS

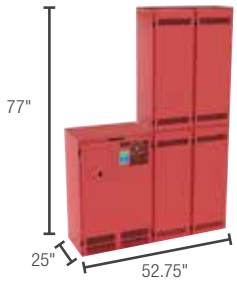

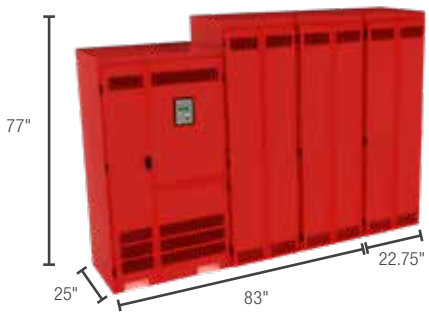

POWER RATING (KW) 30 MIN.	VOLTAGE IN-OUT (VAC)	ELECTRONICS CABINET DIMENSIONS				BATTERIES			BATTERY CABINET DIMENSIONS			TOTAL SYSTEM WEIGHT
		WIDTH (IN)	HEIGHT (IN)	DEPTH (IN)	WEIGHT (LBS)	NO. OF BATTERIES	WEIGHT (LBS)	WIDTH (IN)	HEIGHT (IN)	DEPTH (IN)	WEIGHT (LBS)	
5	120/208 OR 277/480	24	47	25	485	12	860	17.5	62	25	285	1 630
	347/600		69		675							1 820
7.5	120/208 OR 277/480	24	47	25	485	12	860	17.5	62	25	285	1 630
	347/600		69		675							1 820
10	120/208 OR 277/480	24	47	25	590	12	860	17.5	62	25	285	1 735
	347/600		69		802							1 947
12.5	120/208 OR 277/480	30	47	25	640	15	1076	22.75	77	25	375	2 091
	347/600		69		746							2 197
16.7	120/208 OR 277/480	30	47	25	640	20	1434	22.75	77	25	375	2 449
	347/600		69		746							2 555
25	120/208 OR 277/480	37.5	72	25	1 150	40	2868	45.5	77	25	750	4 768
	347/600	67.5			1 285							4 903
33.2	120/208 OR 277/480	37.5	72	25	1 150	40	2868	45.5	77	25	750	4 768
	347/600	67.5			1 302							4 920
37.5	120/208 OR 277/480	37.5	72	25	1 360	60	4302	68.25	77	25	1125	6 787
	347/600	67.5			1 531							6 958
50	120/208 OR 277/480	37.5	72	25	1 360	60	4302	68.25	77	25	1125	6 787
	347/600	67.5			1 550							6 977

POWER RATING (KW)			VOLTAGE IN-OUT (VAC)	ELECTRONICS CABINET DIMENSIONS				BATTERIES			BATTERY CABINET DIMENSIONS			TOTAL SYSTEM WEIGHT
60 MIN.	90 MIN.	120 MIN.		WIDTH (IN)	HEIGHT (IN)	DEPTH (IN)	WEIGHT (LBS)	NO. OF BATTERIES	WEIGHT (LBS)	WIDTH (IN)	HEIGHT (IN)	DEPTH (IN)	WEIGHT (LBS)	
5	4.38	3.75	120/208 OR 277/480	24	47	25	485	12	860	17.5	62	25	285	1 630
			347/600		69		675							1 820
7.5	6.56	5.63	120/208 OR 277/480	24	47	25	485	12	1 190	17.5	62	25	285	1 960
			347/600		69		675							2 150
10	8.75	7.5	120/208 OR 277/480	24	47	25	590	12	1 428	17.5	62	25	285	2 303
			347/600		69		802							2 515
12.5	10.9	9.38	120/208 OR 277/480	30	47	25	640	15	1 785	22.75	77	25	375	2 800
			347/600		69		746							2 906
16.7	14.6	12.5	120/208 OR 277/480	30	47	25	640	20	2 380	22.75	77	25	375	3 395
			347/600		69		746							3 501
25	21.9	18.8	120/208 OR 277/480	37.5	72	25	1 150	40	3 968	45.5	77	25	750	5 868
			347/600	67.5			1 285							6 003
33.2	29.1	24.9	120/208 OR 277/480	37.5	72	25	1 150	40	4 760	45.5	77	25	750	6 660
			347/600	67.5			1 302							6 812
37.5	32.8	28.1	120/208 OR 277/480	37.5	72	25	1 360	60	5 952	68.25	77	25	1125	8 437
			347/600	67.5			1 531							8 608
50	43.8	37.5	120/208 OR 277/480	37.5	72	25	1 360	60	7 140	68.25	77	25	1125	9 625
			347/600	67.5			1 550							9 815

HEAT LOSS TABLE

30 MINUTE RUN TIME		60 MINUTE RUN TIME		90 MINUTE RUN TIME		120 MINUTE RUN TIME	
OUPUT RATING (KW)	HEAT LOSS (BTU/H)	OUPUT RATING (KW)	HEAT LOSS (BTU/H)	OUPUT RATING (KW)	HEAT LOSS (BTU/H)	OUPUT RATING (KW)	HEAT LOSS (BTU/H)
5.00	341	5.00	341	4.38	298	3.75	256
7.50	512	7.50	512	6.56	448	5.63	384
10.0	682	10.0	682	8.75	597	7.50	512
12.5	853	12.5	853	10.9	746	9.38	639
16.7	1 139	16.7	1 139	14.6	997	12.5	854
25.0	1 705	25.0	1 705	21.9	1 492	18.8	1 279
33.2	2 264	33.2	2 264	29.1	1 981	24.9	1 698
37.5	2 558	37.5	2 558	32.8	2 238	28.1	1 918
50.0	3 410	50.0	3 410	43.8	2 984	37.5	2 558

AimLite

2233 rue de l'Aviation,
Dorval QC
H9P2X6, CA

T 514 227-1288
TF 1 866 348-2374
aimlite.com

2023-06-19